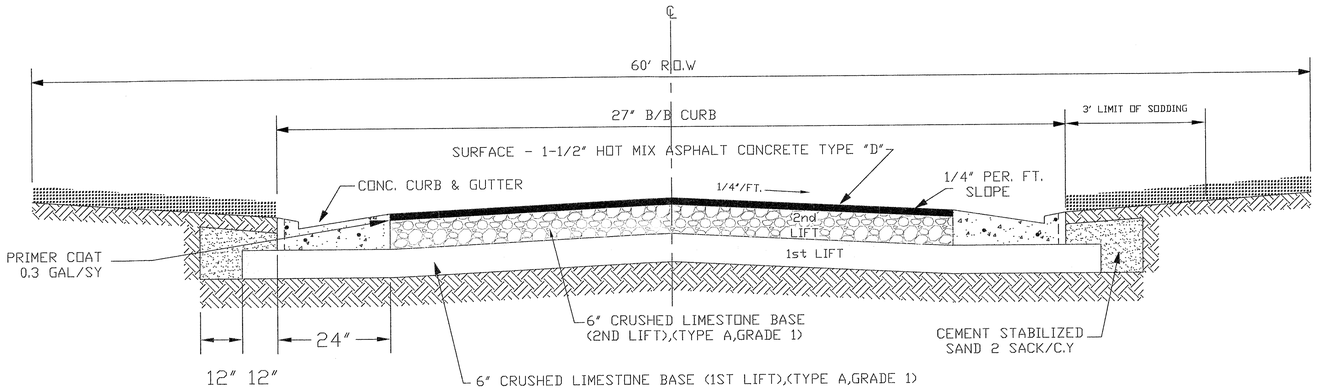

PROPOSED 4TH STREET TYPICAL PAVING SECTION FLEXIBLE BASE W/ CURB & GUTTER

NOTES

SCARIFY & RECOMPACT EXISTING SUB-GRADE TO 98% OF STANDARD PROCTOR (ASTM D-698)

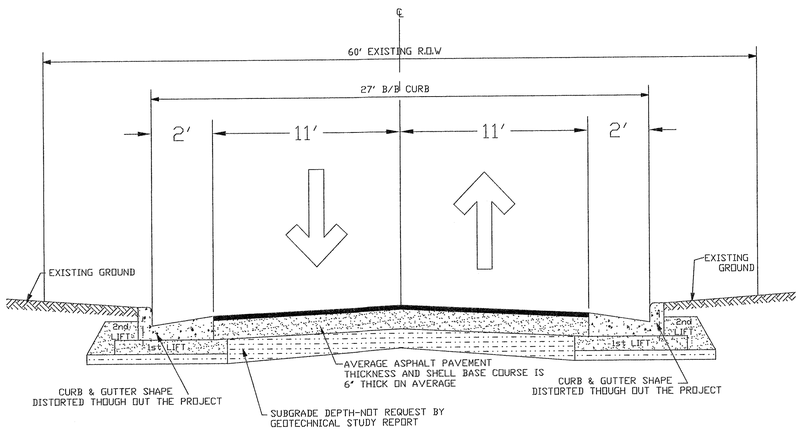

EXISTING TYPICAL SECTION

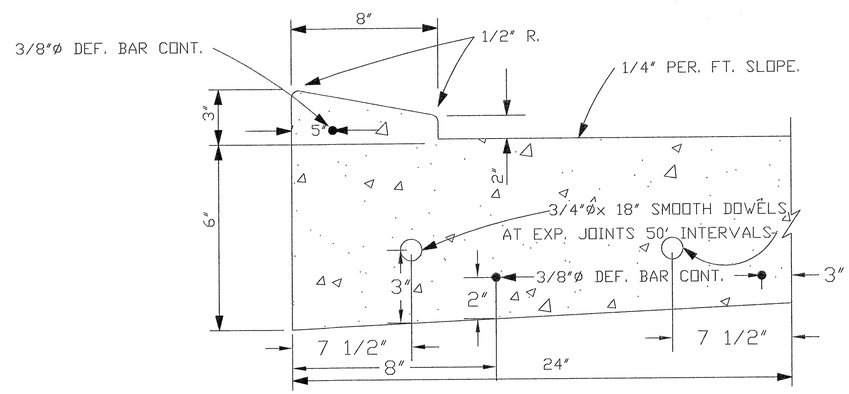

PROPOSED CURB & GUTTER SECTION

REVISED STREET, CURB, AND GUTTER DETAIL

REVISIONS

REV.	DATE	DESCRIPTION	DWG.	APPR.

CITY OF PORT ARTHUR

PUBLIC WORKS ENGINEERING DIVISION

STATE OF TEXAS
HASSAN SHOMALZADEH
60261
REGISTERED PROFESSIONAL ENGINEER

THE SEAL APPEARING ON THIS DOCUMENT WAS AUTHORIZED BY HASSAN SHOMALZADEH, P.E. 60261, ON _____, 2016

City of Port Arthur

4TH STREET IMPROVEMENTS
FROM STADIUM RD. TO DUFF DR.

CITY OF PORT ARTHUR, TEXAS
STREET, CURB, AND GUTTER DETAILS
PUBLIC WORKS DEPARTMENT

SCALE: NOT TO SCALE
DRAWN BY: ADAM ALFRED
CHECKED BY: HASSAN SHOMALZADEH
DATE:

SHEET 1 OF 1